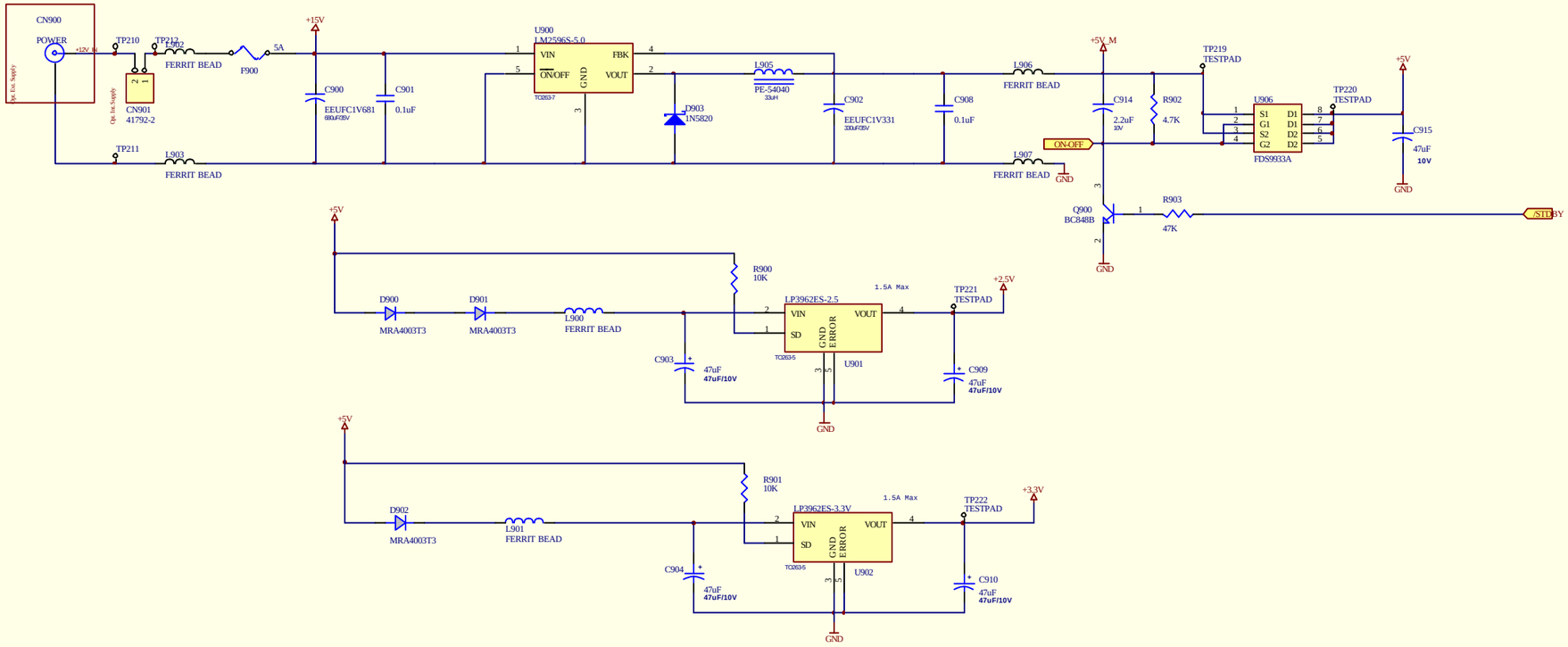

Proje= 20" LCD TV (CHIMEI)
Kod= ZH1.190-02
Schematic= POWER

Beko Elektronik A.S.		
Size C	Title 7. Power	Rev A
Document Number	Control	
Date 24-Sep-2003	Sheet 9 of 9	